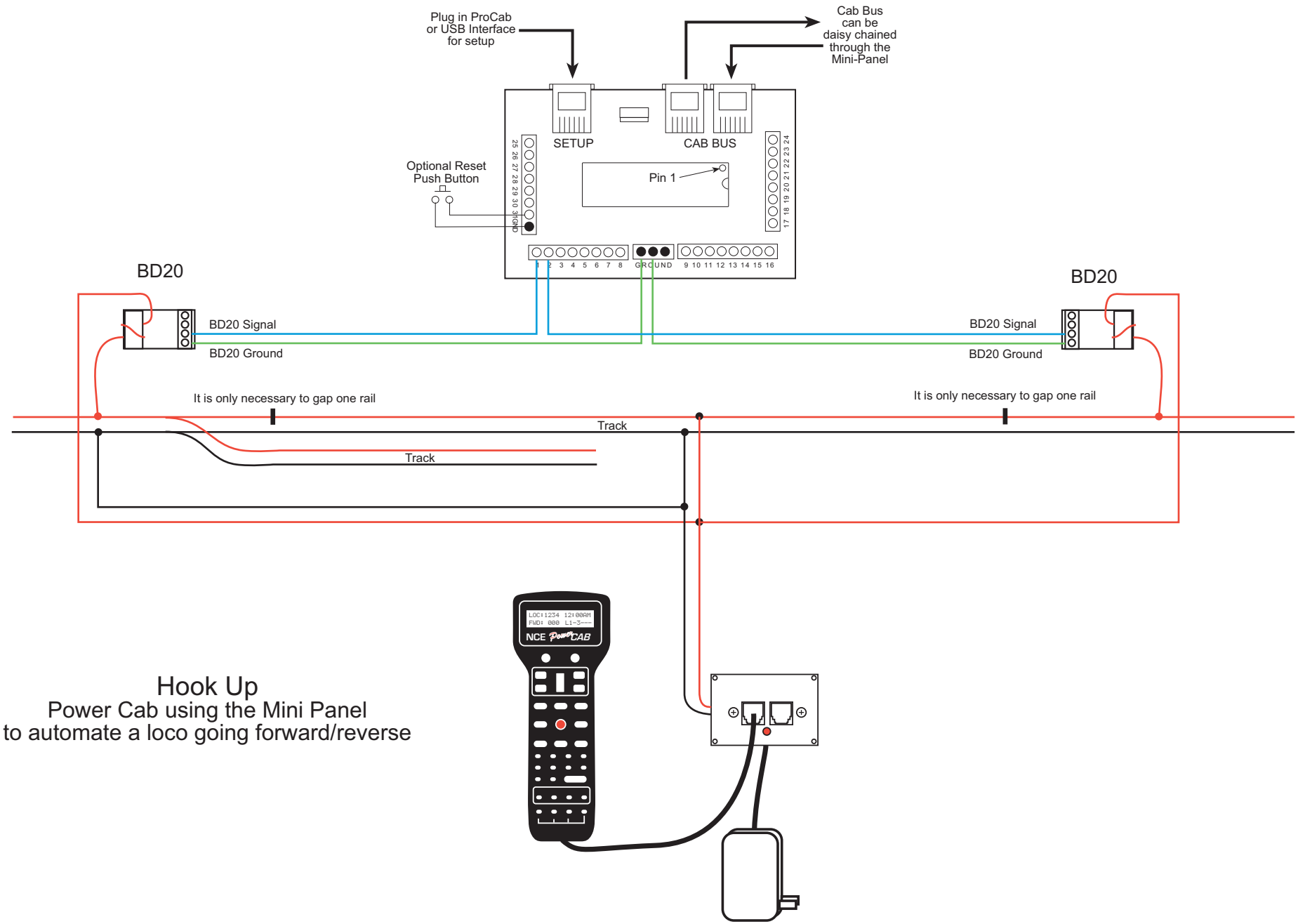

Hook Up

Power Cab using the Mini Panel
to automate a loco going forward/reverse